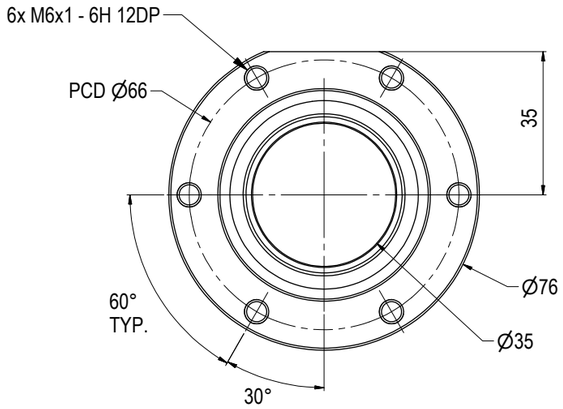

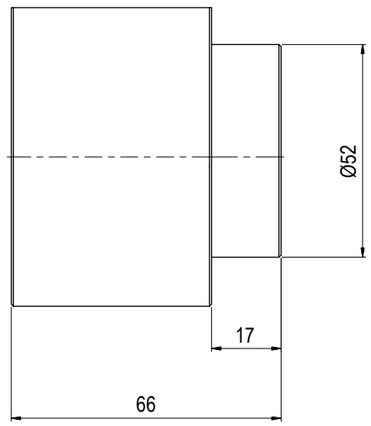

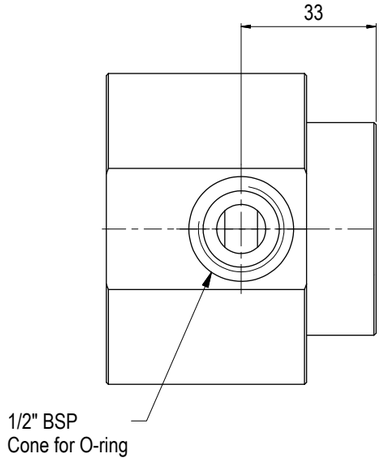

NOTE: 1
DESIGN CODE:
API 17H/6A

NOTE: 2
TECHNICAL CLASSIFICATION:

Article Type:	001-Hot Stabs
Main Group:	1.01. Ø35 Hot Stab
Intermediate Group:	1.1.02. Receptacle
Sub Group:	1.1.2.01. Single

NOTE: 3
INTERFACE INFORMATION:

Pressure Rating Bar:	690
Design Water Depth:	N/A
Material:	S32750 SUPER DUPLEX
Weight:	1,4 kg
Volume:	0,18 dm^3
Submerged Weight:	1,22 kg
Surface Area:	302 cm^2
Hydraulic:	BSP 1/2"
Mechanical:	6x M6@PCD 66
Electrical:	N/A
Com. & Protocol:	N/A

NOTE: 4
ADDITIONAL INFORMATION:
The Ø35mm Blue Logic Hot Stab is made according to API 17H. This Hot Stab is in general designed for flow up to approx 25 liters pr. munute. We have pressure rating up to PSI 20K or 1380 Bar. The Hot Stab system can also be fitted with an lock-system.

Other hydraulic port interface can be delivered on customers request.

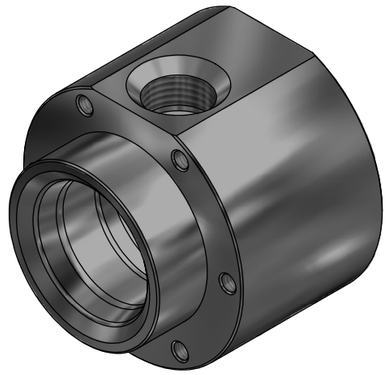

Rev.	Date	Reason for issue	Revision change	Made	Chk'd	Appr.
04	2.10.2025	9-IFU (Issued for Use)	new dimensions	WTJ	HNJ	WTJ
03	25.4.2014	9-IFU (Issued for Use)		WTJ	HNJ	WTJ
02	3.10.2011	Issued for Information		LGH	NA	NA

BLUE LOGIC

This Drawing is the Property of Blue Logic AS © and must Not be Loaned, Reproduced or Transferred to others without written Permission

Unless Noted Otherwise:	Dwg Scale: NTS	Drawing title: Ø35 SP Rec 10k Interv BSP 1/2"	
Dim. Tol: NS-ISO 2768-1N/A	Dwg Proj:		
Roughness: RaN/A	Dwg Format: A3		
Fillet Rad: Corner Rmax: N/A	Break Edges: (R. Alt. 45°) R= 0,1-0,5	Drawing number: BA1045	Rev. 04